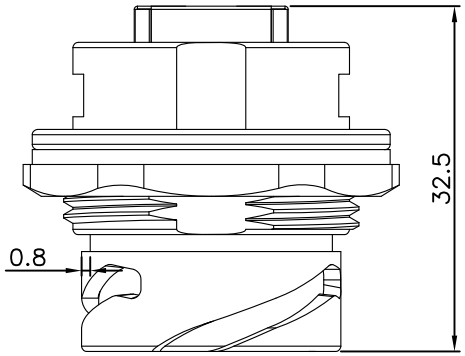

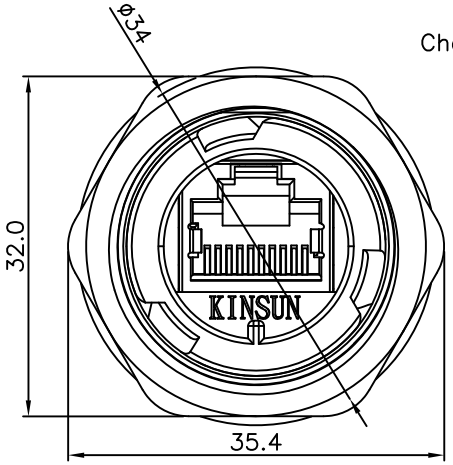

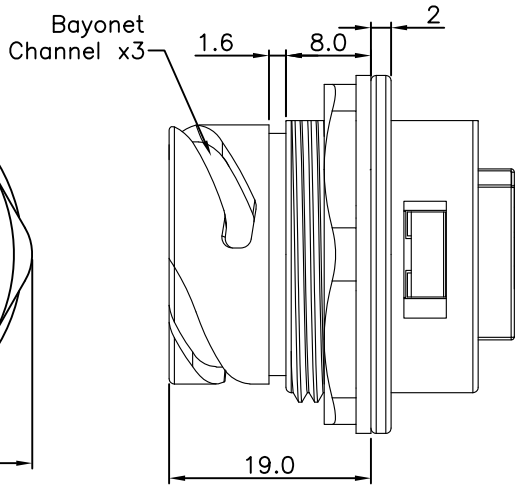

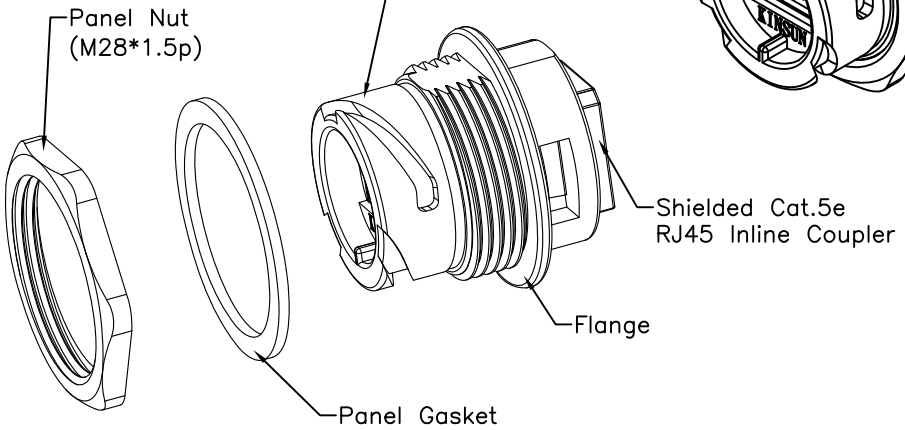

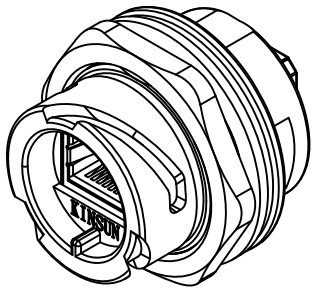

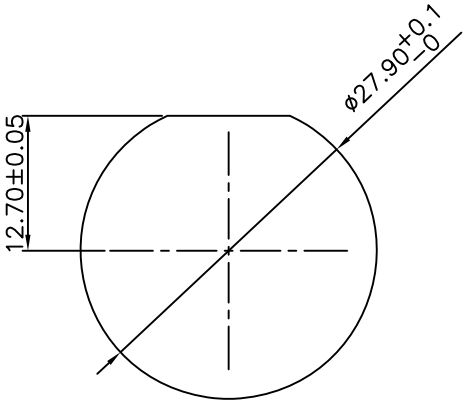

Panel Cut-Out

Electrical Specifications:

- Meets EIA/TIA-568-B.2 Cat.5e Specification
- Contact Resistance: 20 mOhm max
- Insulation Resistance: 500 MOhm min @100V DC
- Current Rating: 1.5A max
- Voltage Rating: 100VDC

DWV: 1000V DC/60s min Contact to Contact, 1500V DC/60s Contact to Metal Shell

Operating Temperature:-40°C TO +85°C

Material and Finish

- Receptacle Housing:Zn Alloy 3,Nickel Plated
- Panel Nut:Coper Alloy,Nickel Plated
- Panel Gasket:Silicone
- RJ45 Jack Metal Shell:Coper Alloy,Nickel Plated
- RJ45 Jack Plastic Housing:Engineering Thermoplastic Flammbility Rating UL94 V-0 Color:Black
- RJ45 Jack Contact:Phosphor Bronze,finish:Gold over Nickel

Connector can be front mounted to a maximum panel thickness of 3.2mm.

50u"

RoHS COMPLIANT

DR.	APPD.	TOLERANCE		ARTICLE 3180-7881			
Andy 10-05-11	Jerry 10-05-11	.XXX	±0.10				
		.XX	±0.25				
		.X	±0.38				
		X	±0.50				
REVISION NOTE		ANG	±3°	DWG NO. 3180			
CONEXCON				單位 UNIT mm	比例 SCALE 2/1	張數 SHEET 1/1	版本 REV. B