LED SPACER SUPPORT

PLASTECH

- MATERIAL:NYLON 66 (UL)
- FLAME CLASS :94V-2
- COLOR:BLACK
- UNIT:mm

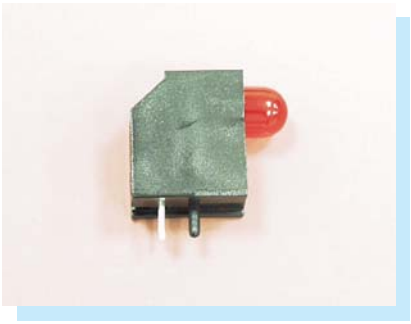

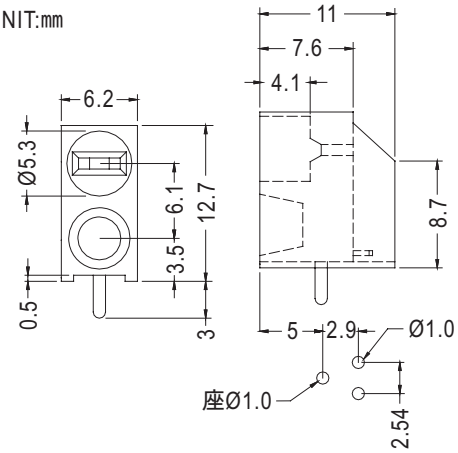

MOUNTING HOLE

PART NO	PACKAGE
LEK-525	1000

3

LED SPACER SUPPORT

PLASTECH

- MATERIAL:POM (UL)
- FLAME CLASS :94HB
- COLOR:BLACK/NATURAL
- UNIT:mm

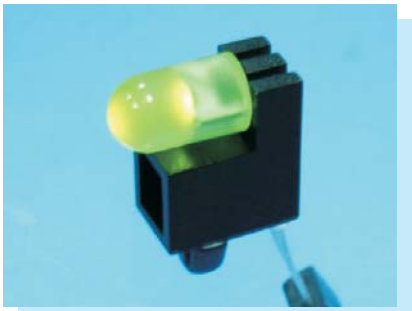

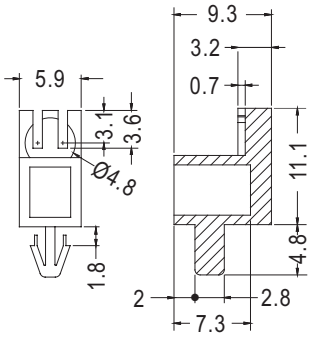

CHASSIS Ø3.5
THICKNESS 0.8~1.6

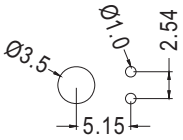

MOUNTING HOLE

PART NO	PACKAGE
LEK-526	1000

LED SPACER SUPPORT

PLASTECH

- MATERIAL:NYLON 66 (UL)
- FLAME CLASS :94V-2
- COLOR:BLACK
- UNIT:mm

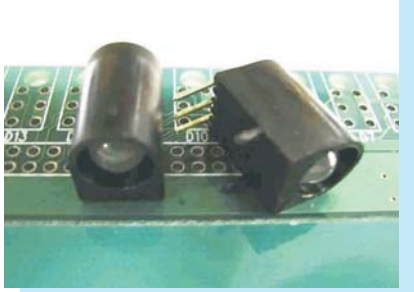

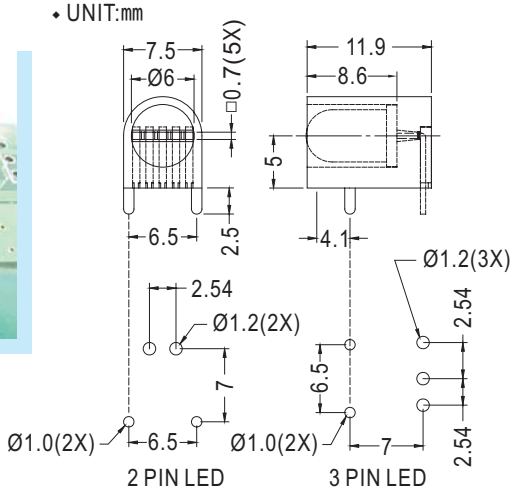

MOUNTING HOLES

PART NO	PACKAGE
LEK-528	1000